# Center for Academic Resources in Engineering (CARE)
# Peer Exam Review Session

**Math 241 – Calculus III**

**Midterm 3 Worksheet**

---

*The problems in this review are designed to help prepare you for your upcoming exam. Questions pertain to material covered in the course and are intended to reflect the topics likely to appear in the exam. Keep in mind that this worksheet was created by CARE tutors, and while it is thorough, it is not comprehensive. In addition to exam review sessions, CARE also hosts regularly scheduled tutoring hours.*

---

Tutors are available to answer questions, review problems, and help you feel prepared for your exam during these times:

Session 1: Nov. 15, 4-5:30 pm Johail, Liz, Cami

Session 2: Nov. 16, 1-2:30 pm Rick, Gabe, Meredith

Can't make it to a session? Here's our schedule by course:

https://care.grainger.illinois.edu/tutoring/schedule-by-subject

Solutions will be available on our website after the last review session that we host.

Step-by-step login for exam review session:

1. Log into Queue @ Illinois: https://queue.illinois.edu/q/queue/845
2. Click "New Question"
3. Add your NetID and Name
4. Press "Add to Queue"

**Please be sure to follow the above steps to add yourself to the Queue.**

Good luck with your exam!

1. Making an appropriate change of variables, compute the following double integral over the region bound by a circle of radius 2 and a circle of radius 5.

$$\iint_D e^{x^2+y^2}\ dA$$

2. Consider the region $R$:

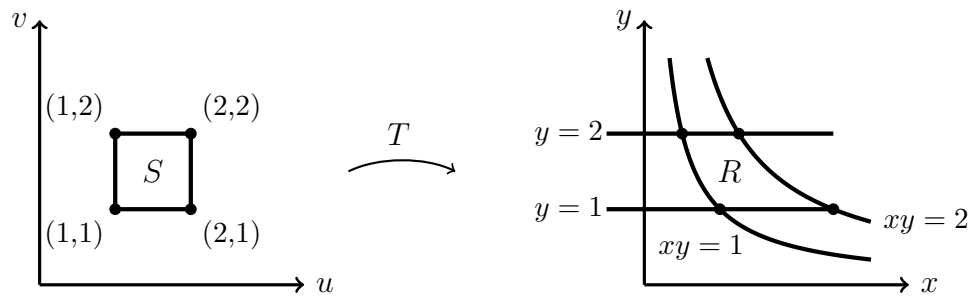


(a) Suppose there exists a transformation $S$: $\mathbb{R}^2 \to \mathbb{R}^2$ from $S$ to $R$. Find $T(u, v)$

(b) Use the answer from (a) to evaluate $\iint_R x^2 \mathrm{d}A$

3. A toilet paper manufacturing company has increased their production. Unfortunately, this production increase has caused a major manufacturing error! As you move towards the center of any one toilet paper roll, the sheets get progressively more dense. The density of a toilet paper roll can be modeled using the following function:

$$\rho(r) = \cos\left(\frac{\pi(r-1)}{6}\right) + 1$$

$r$ is the radial distance away from the center of the roll (inside the center cardboard tube). The whole roll can be modeled as a cylinder with an outer radius of 6, and inner radius of 2 (the cardboard tube radius), and a height of 10.

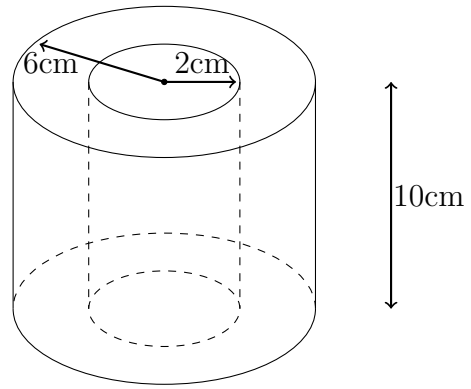


(a) Without using a calculator, calculate the mass of the toilet paper roll if the density everywhere was just 1 (leave $\pi$ in your answer)

(b) Set up the triple integral to solve for the mass of a toilet paper roll. Neglect the weight of the inner cardboard tube for your calculation.

(c) Without using a calculator, solve the integral (leave $\pi$ in your answer)

4. What is the x-coordinate of the center of mass for the shaded region if it has a density function $\rho(x, y) = 3x + 2y$? (Solve the integral by hand then evaluate the final expression with a calculator.)

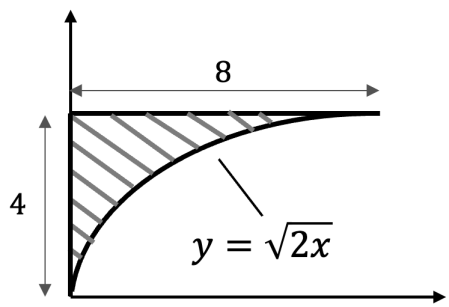


5. Find the surface area of $z = \frac{x^2+y^2}{2}$ that lies within the cylinder $x^2 + y^2 = 4$. (Evaluate the integral by hand.)

6. Set up the triple integral of the function $f(x, y)$ using spherical coordinate over the solid shown below.

$$f(x, y) = \frac{x^2 + y^2}{z^2}$$

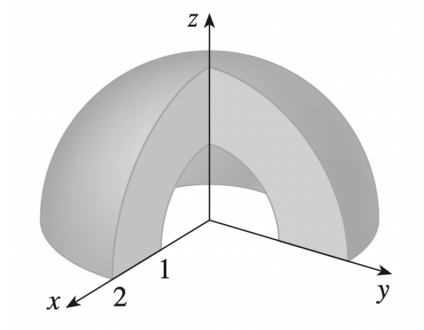


7. Using cylindrical coordinate to set up the integral to calculate the mass of a solid that is enclosed by both the cone $z = \sqrt{x^2 + y^2}$ and the sphere $x^2 + y^2 + z^2 = 8$. The density of the solid is modeled by $f(x, y, z) = \arctan(y/x)$.

8. Evaluate $\iint_R 6x - 3y dA$ where $R$ is the parallelogram with vertices $(2,0)$, $(5,3)$, $(6,7)$, and $(3,4)$ using the transformation $x = \frac{v-u}{3}$ and $y = \frac{4v-u}{3}$.

9. Consider the following vector fields $\vec{F}(x,y,z)$. Are they conservative? If so, find a function $f(x,y,z)$ so that $\nabla f = \vec{F}$. If not, justify your response.

(a) $\vec{F}(x,y,z) = \langle yz, xz, xy + 2z \rangle$

(b) $\vec{F}(x,y,z) = \langle y + e^x, x - \cos y, 4 + z \rangle$

(c) $\vec{F}(x,y,z) = \langle y, z^2, x \rangle$

10. The vector field $\vec{F} = \langle 2xy + 2x + y^2, 2xy + 2y + x^2 \rangle$ is conservative. Find a potential function $f$ for $\vec{F}$ (a function with $\nabla f = \vec{F}$)

11. Find the work done by the force field below in moving an object from (1,1) to (2,4) (HINT: Check if the vector field is conservative).

$$\vec{F}(x, y) = \langle 6y^{\frac{3}{2}}, 9x\sqrt{y} \rangle$$

12. Evaluate $\int_C F \cdot dr$ where $F(x, y) = \langle 3y^2 - \cos y, x \sin y \rangle$ and C is a clockwise path shown below.

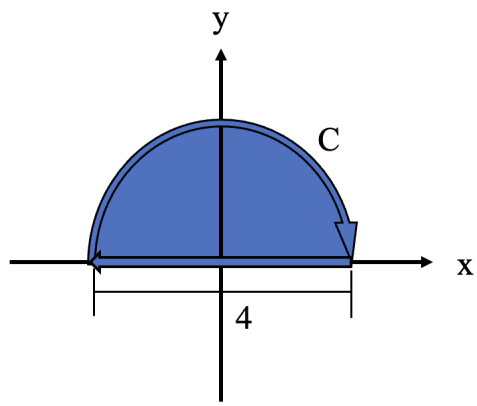


13. Evaluate $\int_C \nabla f \cdot d\vec{r}$ where $f(x, y) = ye^{x^2-1} + 4x\sqrt{y}$ and C is given by $\vec{r}(t) = \langle 1 - t, 2t^2 - 2t \rangle$ with $0 \leq t \leq 2$.